Journal of the Nigerian Association of Mathematical Physics
***Volume 30*, (May, *2015*), pp337 – 342**

Design and Construction of a Talking Clock

***Okosun O. and Osa E.*[2]**

Electrical/Electronic Engineering Department, University of Benin, Benin City, Nigeria.

Abstract

Most of the time-measuring instruments which have been developed give information about time visually. This denies the visually impaired the ability to keep track of time and as such makes him unable to manage time. This paper presents a design and construction of a Talking Clock. The design incorporates both audio and visual function which will enable the visually keep track of time. ICs such as microcontroller (PIC18F4620), voice chip (ISD17240), Real Time Clock (PCF8583), LCD Screen and other discrete components were used in designing the project. The circuit diagram and components were chosen after a considerable research was done to ensure efficient operation of circuit and low cost.

Keywords: Microcontroller (18F4620), Voice Chip (ISD 17240), RTC (PCF8583), LCD display, visually impaired

1.0 Introduction

Time is the most important resource; it is the most precious thing of life, a gift of nature to humanity. Every bit of our life is defined by time, it influences every single thing we do. Therefore, time is more valuable to man than every other human resource or capital. Although, time is freely available to every man, it is limited in availability just like other resources of life. It is only when it is properly managed and utilized that it will be able to yield to us its numerous advantages. Therefore the need for proper management of time cannot be overemphasized. Effective time management helps to structure our daily lives and activities so we can achieve our goals within the limited time space. It helps us finish more jobs with less effort. It makes us become more organized and the things we do become more habitual than panic –driven. By making it a habit we become more productive in our work.

In a bid to effectively manage time, man over the years has developed different devices to measure and keep track of time. Some of such devices include sundials and obelisks, hour glass, water clock or clepsydra, candle clock, incense clock, astronomical clock, verge escapement, clockmakers, quartz oscillator, atomic clocks [1], etc.

Most of the time-measuring instruments which have been developed give information about time visually. This actually denies the visually impaired the ability to keep track of time and as such makes him unable to manage time. To proffer solution to the above problem there is need for the design of a talking clock which could audibly tell the time.

A talking clock is a timekeeping device that notifies users of the current time, audibly. It may also be referred to as a speaking clock. Talking clocks have different designs depending on their intended use; some are designed as devices for the visually impaired, others are intended to help children learn to tell time, while others are simply designed like traditional clocks with the option to speak the time aloud. This is typically used for alarm purposes. Many of these talking clocks audibly announce time with the click of a switch and can even tell the time in different languages at a simple click. A further advancement in this technology is the use of digital data storage and speech recognition technologies in talking clock design. Such clocks are triggered to tell time using a voice command [2, 3, 4].

Previous Work

Rohit et al [5] designed a talking clock a speech module APR9600, RTC (DS1307), micro-controller PIC18F4550, an LCD display, buttons and a 5v power supply. The power supply unit made the circuit a bit bulky. Also the speech module used has short recording time. Our design work will address these short comings. The improvement made by this work is in using a Real Time clock (PCF8583) that comprises a CMOS battery which makes it possible for the circuit to still be powered even when power is out hence making the time always correct anytime the device is switched on and the Voice chip (ISD 17240) used can sample at 12KHz compared to the APR9600 used by Rohit et al [5].

Corresponding author: Okosun O., E-mail: oduware.aghama@uniben.edu, Tel.: +23408132979652

2.0 Design Consideration and Analysis.

The circuit design is in six stages which are the power supply circuit, microcontroller circuit, voice chip circuit, clock circuit, display unit and the control unit.

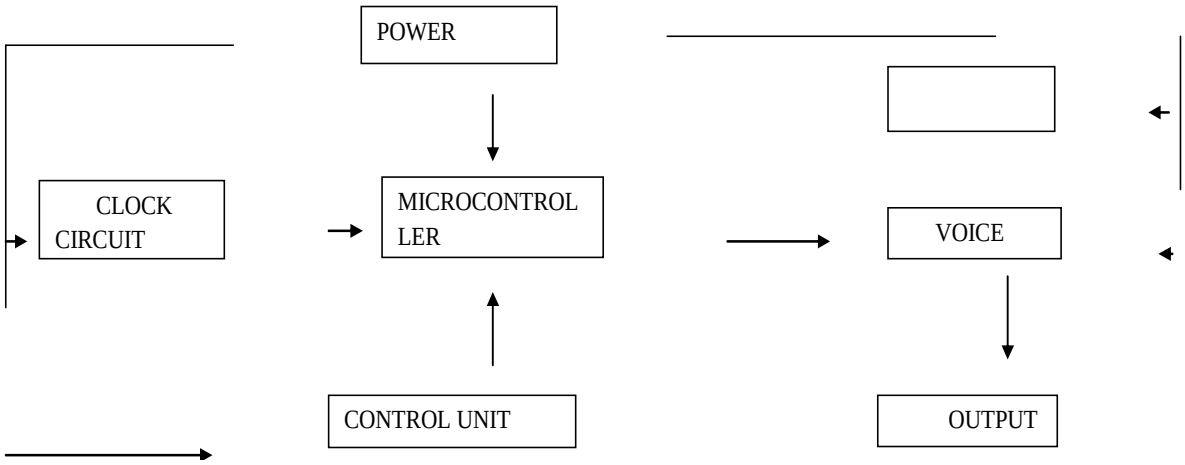

Fig 1: Block diagram of talking clock

2.1 Power Supply Circuit

The power supply unit supplies the required voltage to power up the circuit. The required voltage is +5V based, this is what the digital ICs which are operating on Transistor-Transistor levels (TTL) needs to work properly. Our main voltage source is a dry cell battery which supplies 9v dc voltage to the circuit. This circuit converts the 9v supplied by the battery to the required +5v.

D1: The diode D1 is a protection diode. The protection diode is used in this circuit so that current will not flow in the reverse direction in the circuit. Because a diode only allows current to flow in one direction in a circuit but not the other, it can protect components in a circuit that are sensitive to current that flows through them in the wrong direction [2, 3].

The voltage coming out of the battery is 9V, when this passes through the diode; there is a 0.7v drop across the diode due to the potential barrier of the silicon diode. Therefore the actual voltage coming out the diode is 8.3V.

C1: This capacitor is there to filter out any noise coming from the voltage source (the battery). The voltage regulator works best and will be most efficient when a clean DC signal is fed into it. The capacitor, in essence, acts as a bypass capacitor. It shorts the AC signal of the voltage signal (which is noise on the voltage signal) to ground and only the DC portion of the signal goes into the regulator.

U2: This is a voltage regulator. The voltage regulator is to give a constant output voltage of 5v. For effective Voltage regulation, the minimum input voltage should be

$$V_{\min} = V_{out} + V_{ref} \quad \ldots\ldots\ldots\ldots\ldots\ldots\ldots\ldots\ldots\ldots\ldots\ldots \quad (1)$$

$V_{\min}$ – Minimum input voltage,

V_{out} – Required output voltage: 5

V_{ref} – Datasheet Stipulated reference voltage; 2V

$V_{\min} = 5 + 2 = 7v$

The minimum input voltage is 7V. Since the output voltage after the capacitor is 8.3V, this voltage regulator could be used comfortably. Therefore the regulator chosen is LM7805 [6].

C2: This capacitor again filters out any noise or high-frequency (ac) signals that may be on the DC voltage line. The rating is stipulated in the 7805 voltage regulator's data sheet as 0.1uf.

2.2 Microcontroller Circuit

The microcontroller circuit provides a means of controlling and synchronizing the operations of the circuits of in order to produce the desired result.

The capacitors C15, C16 and the crystal X1 form the crystal oscillator circuit. This circuit is used in the generation of the clock signal required to control the slaves connected to it. The value of the capacitors and crystal oscillator used in this circuit is as quoted in the datasheet of the PIC18F family microcontroller. This oscillator circuit gives a clock signal of about 32 KHz [6].

The SDA and SCL lines are used in communicating with THE REAL TIME CLOCK using the I2C mode. The MISO, MOSI and SCL lines enable communication between the microcontroller and the voice chip in the SPI mode. The MODE, SELECT and ENTER lines are connected to the tactile switches this enables external control to the microcontroller and the entire circuit. The tactile switch TAT6 connected to the MASTER CLEAR pin is used in resetting the microcontroller.

2.3 Voice Chip Circuit

In the SPI mode, a microcontroller is used in controlling the voice chip's operation using the SPI communication module. The bulk of the operation of the voice chip is done by the program of the microcontroller [7, 8].

R1; the resistor R1 is used to select the sampling frequency of the voice chip. The resistor value of 82KΩ gives a sampling frequency of 8 KHz. Selected according to datasheet specification[7].

R2, R3; the auxiliary analog input to the device is used for recording and feed through. The input to this pin must be limited to 1Vpp (1v peak to peak voltage) to ensure optimum operation of the chip.R2 and R3 are used to keep the input voltage to this value. The values suitable for this, according to market availability are 470 KΩ and 1KΩ.[7]

R4; this is current limiting resistor used to protect the LED by keeping the current below the maximum diode current rating.

$$R_4 = \frac{V_S - V_D}{I_D} \quad \text{.....} \quad (2)$$

V_S - Supply voltage: 5V

I_D - Current of the diode: given as 20mA

V_D - Voltage of the diode : 2V

$$R_4 = \frac{5-2}{20\,x10^{-3}} = 150\Omega$$

Resistor range of 150Ω or above could be used. Due to market availability, 1KΩ was chosen.

R6, R7; these resistors are used to maintain the input to the microphone at 300mV as specified by the voice chip datasheet. Resistor value of 4k7 Ω was chosen for the two resistors according to market availability[7].

C3; the automatic gain control pin is connected to the analog ground through the capacitor C3. The automatic gain control allows a wide range of signals to be recorded with minimal distortion. The value of the capacitor is 4.7uF as given by the data sheet.

C5, C6, C7, C8, C9, C12; these capacitors are used as bypass or decoupling capacitors employed to conduct away the alternating current around the voice chip. C5-C8 are 0.1uF ceramic capacitors while C9 and C12 are 100uF electrolytic capacitors. The values chosen are as indicated by the voice chip datasheet.

C4, C10, C11; these capacitors are used as coupling capacitors, used to block DC component of the speech from the MIC from entering the voice chip. C4, C10 and C11 are 0.1uF ceramic capacitors. The value chosen is as indicated by the voice chip datasheet [7, 8, 9].

2.4 Clock Circuit

This circuit is designed to keep track of the time.

The diodes D3 and D4 are protection diodes. The protection diodes are used in this circuit to ensure that current will not flow in the reverse direction in the circuit.

The capacitors C13 and crystal X1 forms the oscillator circuit which generates the clock signals required for proper operation of the clock circuit. The value of the capacitor and crystal oscillator used in this circuit is as indicated in the PCF8583 (RTC) datasheet [6].

The resistors R80, R9 and R10 are used as pull-up resistors. They were used to eliminate floating and maintain the lines at the required logic level. Normally, resistor value of the order 10KΩ is chosen for pull-ups however it must be noted that the higher the value of resistor the slower the pin to respond to voltage changes. So to ensure fast response, 1KΩ was chosen for the pull-up here.

The connectors J5 and J6 are connected to CMOS battery. This battery keeps the RTC working when there is no power in the circuit.

2.5 Display Unit

This unit is used in displaying the time and date as given by the RTC. The LCD is connected in the 4-bit mode so only RS, E and D4-D7 lines are used for data transfer. These lines are connected to the microcontroller while the rest D0-D3 are grounded. The VDD is connected to VCC to power the LCD. The variable resistor RV1 is used to vary the contrast of the display. 1kΩ variable resistor was chosen according to LCD design specifications.

2.6 Control Unit

The control unit provides a means setting the clock to the time of the day of the particular geographical location.
This circuit consists of three tactile switches connected to the microcontroller using 10KΩ pull-up resistors

3.0 Principle of Operation

The whole circuit diagram is given in Fig. 2. It is built round a voice chip ISD17240PY.This IC is able to playback recorded audio files.
The whole circuit uses a 5 volts DC for its operation and this is obtained from a 9v battery. The required 5V is obtained from the power supply circuit consisting of filter capacitors C1and C2 and voltage regulator U1. This voltage is supplied to the clock circuit, the clock circuit using the capacitor C13 and crystal X2 generates the clock signal required to operate the clock. The output from the clock fed into microcontroller using the SDA and SCL lines. Resistors R9 and R10 are used as pull-up resistors. The time from the clock circuit is read by the microcontroller and displayed visually using the LCD display. The clock time can be set using the TACT1 and TACT2 switches connected to the microcontroller through the MODE and SELECT lines.
The voice chip is connected to the microcontroller using the SPI lines; SCL, MISO and MOSI. These lines are used by the microcontroller to control the voice chip. To audibly tell time the microcontroller through a sequence of operation will command this IC to output stored audio files which corresponds to the time as given by the RTC. The sequence of operation controlled by the program stored in the microcontroller. The audio signal from the voice chip is passed to the speaker. The speaker converts this signal into audible sound that can be perceived by the ear [7, 8,10].

4.0 Construction

The complete project was first simulated with electronic workbench, and found to be working satisfactorily. The components purchased for construction were tested individually to ensure they were working before they were used in the project. The circuit was then designed on a bread board. This temporary design was to test the circuit design and ensure it is working properly. After testing the project, that the components were then transferred to the PCB board and soldered carefully.

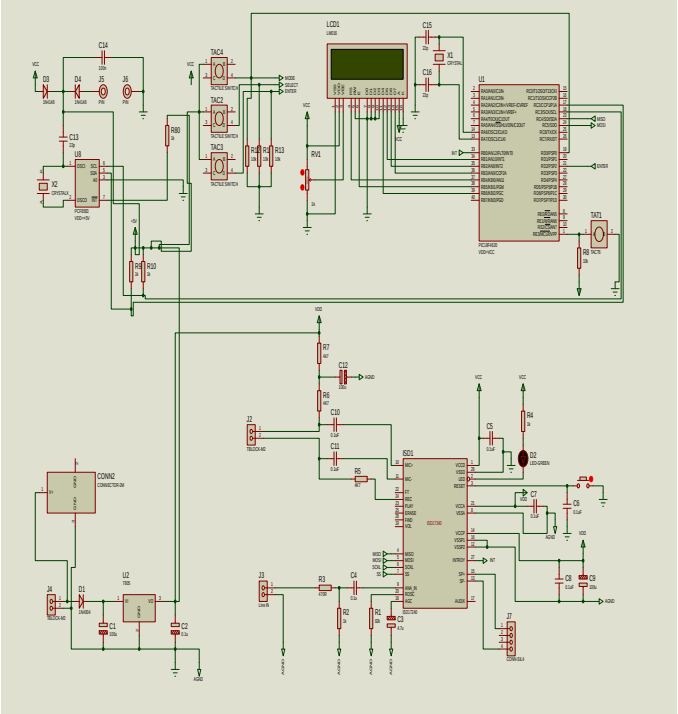

Fig 2: Complete Circuit Diagram of Talking Clock

6.0 Bill of Quantities

Table 1: Bill of Quantities

S/N	Component	Quantity	Unit Price(n)	Amount(n)
1	Microcontroller	1	1500	1500
2	Voice chip	1	2500	2500
3	Voltage Regulator	1	50	50
4	Real Time Clock	1	300	300
5	Liquid Crystal Display	1	800	800
6	Diodes	4	10	40
7	Capacitors 100 uF capacitor	15 1	10 100	 260
8	Resistors	15	10	150
9	Variable Resistor	1	20	20
10	Crystals	2	50	100
11	Connector	1	100	100
12	Tactile Switch	4	50	200
13	PCB	1	2950	2950
14	Total			8970

Fig 3: Front view of the talking clock

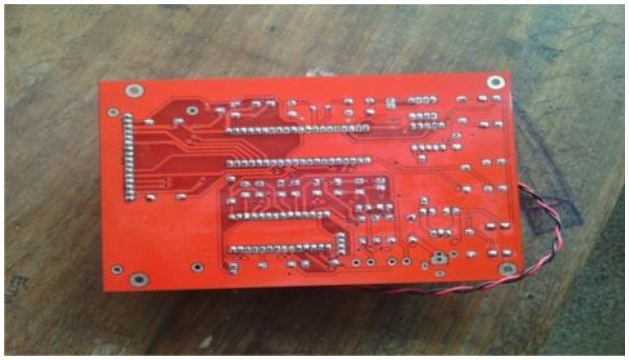

Fig 4: Back view of the talking clock

7.0 Conclusion

The aim of this project was to design and construct an electronic circuit, which is able to tell the time of the day audibly whenever it is required to do so. The design was based on a voice chip, a microcontroller and a Real Time Clock.

Bearing in mind the aforementioned purpose of this project work, the various stages involved in the design and construction process of this work were designed, constructed and tested starting from the power supply stages to the microcontroller stage and to the display unit.

8.0 References

[1] http://www.smashinglists.com/ "10-early-firsts-in-timekeeping-devices 10 Early Firsts in Timekeeping Devices" . Accessed Feb 9th 2015

[2] www.nawcc.org/../1174-tick-tock-talk M.B McKinley "The collected History and Significance of Talking Clock" Accessed Sept 26th 2014

[3] http://en.wikipedia.org/wiki/Talking_clock "Talking clock - Wikipedia, the free encyclopedia" Accessed Sept 26th 2014

[4] http://www.moty22.co.uk/talking_clock.php " Talking Clock" Accessed Sept 26th 2014

[5] Rohit Kumar, B. Malla Reddy and N. Bhoopal; "Design and Implementation of A TALKING LCD Display" International Journal of Modern Engineering Research (IJMER) Vol.2, Issue.5, Sep-Oct. 2012 pp-3448-3450 ISSN: 2249-6645.

[6] Horowitz P.; "The art of Electronics", Cambridge university press second edition 1989, ISBN 0-521 -37095-7. Pg 284-303, Cambridge, U.S.A

[7] ISD1700 Full design guide. October 2006.

[8] Ricardo J.; "Designing with Speech Processing Chips" Academic Press First edition 1991 - ISBN-13: 978-0124317093.Pg 168-170

[9] mrl.nyu.edu/~nat/VoiceChips.pdf Natalie J. "Dialogue with a Monologue: Voice Chips and the Products of Abstract Speech". Accessed Feb 9th 2015

[10] http://www.instructables.com/id/Make-a-Talking-Clock Gangster; "Robot Voice: How to Make Any Circuit Talk" Accessed Oct. 3rd 2014

[11] Malvino A. P. and Bates D. J.; Electronic Principles, Glencoe McGraw-Hill Companies, Seventh Edition 2007. *ISBN*-13: 978-0073222776 .Pg 58-70